HT 4040 Thermal shock resistant thermocouple up to 1500°C

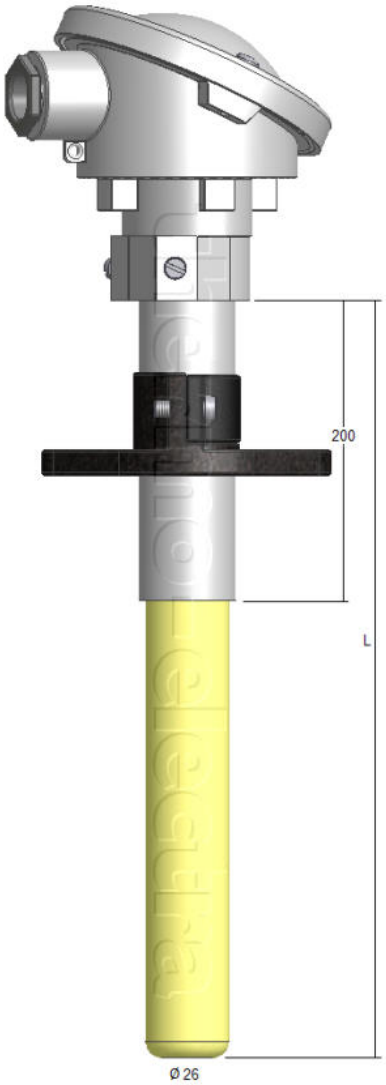

Protection tube	
Construction	Porous ceramic outer tube
Property	Thermal shock resistant
Insertion length	Customer to specify
Diameter	26x4.0mm standard, other diameters possible
Material	Ceramic 530 (C530)
Temperature	1500°C maximum
Inner tube	Gastight to protect the wires
Material	Ceramic 710 (C799) standard, Sapphire optional
Process connection	Sliding flange model MFA-C (showed), other executions possible for example a welded ANSI of DIN flange
Connection head	
Material	Aluminium or Stainless Steel
Cable entry	M20x1.5 standard, other threads possible
Extension	
Material	Steel standard, other materials possible
Diameter	32mm standard, other diameters possible
Length	200mm standard, other lengths possible
Measuring insert	
Interchangeable	Yes
Insulation	Ceramic 610 (C610)
Shape	Rod with 2, 4 or 6 holes
Thermocouple	
Calibration	B, R or S
For duplex	BB, RR or SS
Wire size	0.35mm or 0.5mm
Accuracy	According IEC 60584-1
Options	
Swing-Cover head	DAN, transmitter direct mounted on measuring insert
High Swing-Cover head	DAN-H, transmitter in cover, insert with ceramic block

Ordering code

*This datasheet is purely indicative, build-up of model code may vary from this datasheet.

Model	HT 4040			

Calibration

Length "L" in mm

Wire size

Thermo Electra B.V.
Weteringweg 10
2641KM Pijnacker
The Netherlands

Phone +31 (0)15 - 3621200
Fax +31 (0)15 - 3694082
Email sales@thermo.nl
http://www.thermo-electra.com