HT 4090 Glass industry Single or Tri-level thermocouple

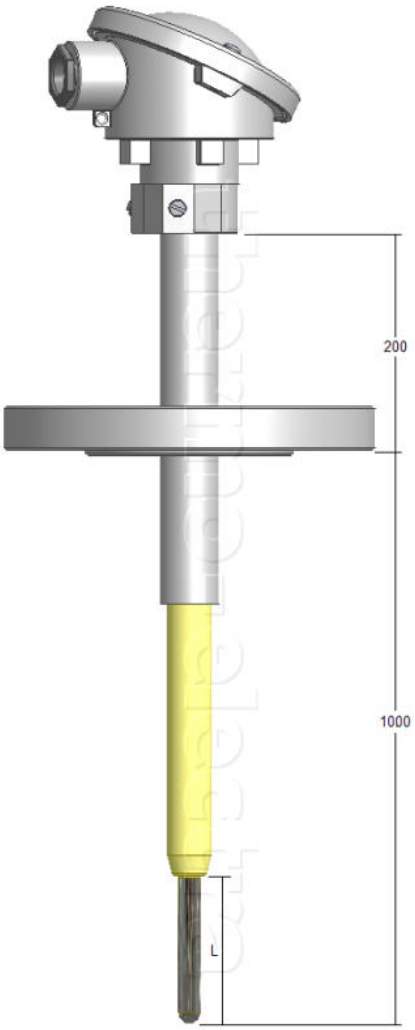

Protection tube	
Construction	Platinum Rhodium tip suitable for molten glass
Support tube	Ceramic 710 (C799), 24x18mm
Insertion length	1000mm standard, other lengths possible
Noble metal tip	
Standard	PtRh10%
Optional	Oxide Dispersion Strengthened, ODS® Platinum
Diameter tip	9.0x1.0mm standard, other diameters possible
Tip length	Customer to specify
Temperature	1800°C maximum
Connection head	
Material	Aluminium or Stainless Steel
Cable entry	M20x1.5 standard, other threads possible
Process connection	
Flange	According to ANSI or DIN standard, to specify
Material	To specify
Thermocouple	
Single thermocouple	R, S or B
Tri-level thermocouple	Type B standard
Wire grade	Type R/S available in HTX grade
Wire size	0.35mm or 0.5mm
Accuracy	According IEC 60584-1
Options	
Improved wire option	HTX grade for R and S
Transmitter 4-20mA	In-Head transmitter, standard or Ex version. Please select from our standard range or specify your own standard
Swing-Cover head	DAN, transmitter direct mounted on measuring insert
High Swing-Cover head	DAN-H, transmitter in cover, insert with ceramic block

Ordering code

*This datasheet is purely indicative, build-up of model code may vary from this datasheet.

Model	HT 4090					

Calibration

Length "L" in mm

Wire size

Single (S) or Tri-level (T) thermokoppel

Options

Thermo Electra B.V.
Weteringweg 10
2641KM Pijnacker
The Netherlands

Phone +31 (0)15 - 3621200
Fax +31 (0)15 - 3694082
Email sales@thermo.nl
http://www.thermo-electra.com