DWK 6055 Vibration proof thermocouple

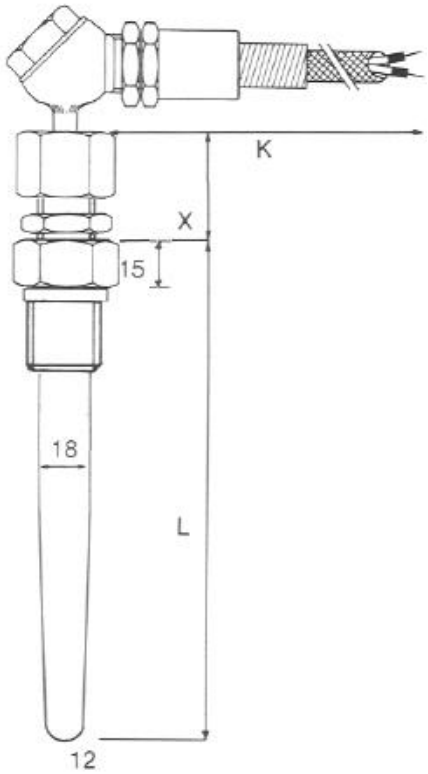

Design	
	Designed for use on combustion engines
Protection tube	
Construction	Barstock drilled
Material	SS 316 - (Wst 1.4401)
Insertion length "L"	Customer to specify, standard 150 mm
Diameter	Conical 18 to 12 mm
Process connection	1/2" BSP
Extention length "X"	Standard 50 mm
System	Springloaded insert
Lead wire	
	Heat and oil resistant armoured extension cable 250°C
Lead wire length "K"	
	Customer to specify, standard 1000mm
Thermocouple	
Sensor	K, J or L thermocouple, Customer to specify
Accuracy	According IEC 584-1
Hot junction	Insulated
Testing	Tested 500 Volt @ 20°C
Insulation	Minimum 100Mohm
Design	Vibrationproof
Temperature	
	800°C maximum

Ordering code

*This datasheet is purely indicative, build-up of model code may vary from this datasheet.

Model	DWK 6055				

Calibration

Length "K" in mm

Length "L" in mm

Length "X" in mm

H6-1 Rev. 07/07

Thermo Electra B.V.
Weteringweg 10
2641KM Pijnacker
The Netherlands

Phone +31 (0)15 - 3621200
Fax +31 (0)15 - 3694082
Email sales@thermo.nl
http://www.thermo-electra.com